REVISIONS		
LETTER	DESCRIPTION	DATE
A	UPDATED DRAWING AND LABEL	7-31-17

INPUT	JUMPERS	INPUT ON
480V	H4 TO H5	H1 & H8
460V	H4 TO H5	HI & H7
450V	H4 TO H5	H1 & H6
440V	H3 TO H5	H1 & H7
430V	H3 TO H5	H1 & H6
420V	H2 TO H5	H1 & H6
230/240V	H1 TO H5 & H4 TO H8 OUTPUT 4% LESS FOR 230 VOLTS	H1 & H8
220V	H1 TO H5 & H3 TO H7	H1 & H7
208/200V	H1 TO H5 & H2 TO H6 OUTPUT 4% LESS FOR 200 VOLTS	H1 & H6

OUTPUT	JUMPERS	OUTPUT ON
240V	X4 TO X5	X1 & X8
230V	X3 TO X5	X1 & X8
220V	X3 TO X5	X1 & X7
208V	X3 TO X5	X1 & X7
	TO GET 208 VOLTS, USE A 5% VOLTAGE UP CONNECTION FROM ACTUAL VOLTAGE EXAMPLE: INPUT 440V TO THE 460V TERMINAL	
120V	X1 TO X5 & X4 TO X8	X1 & X8
115V	X1 TO X5 & X4 TO X8	X1 & X8
	TO GET 115 VOLTS, USE A 5% VOLTAGE UP CONNECTION FROM ACTUAL VOLTAGE	
110V	X1 TO X5 & X3 TO X7	X1 & X7
100V	X1 TO X5 & X3 TO X7	X1 & X7
	TO GET 100 VOLTS, USE A 10% VOLTAGE UP CONNECTION FROM ACTUAL VOLTAGE	

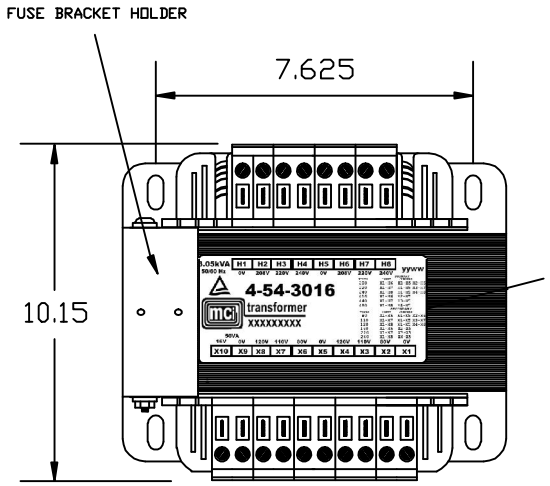

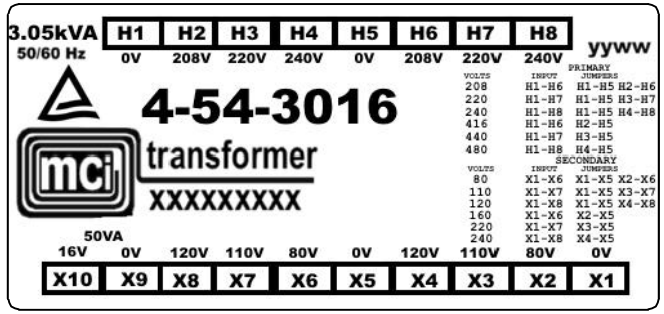

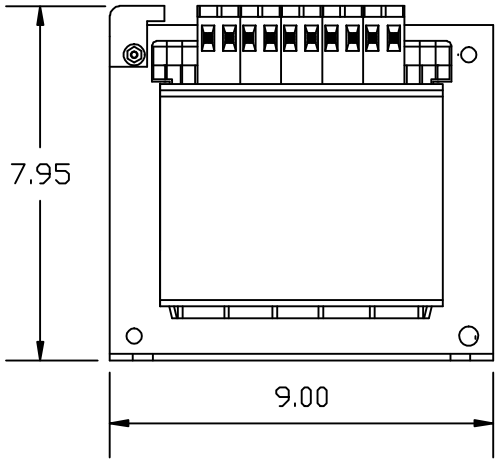

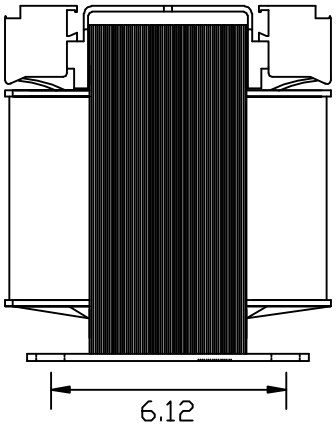

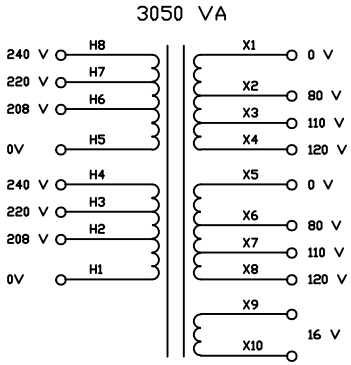

NOTES:

1) UL INSULATION SYSTEM E86543-CLASS F 155°C.
2) TUV CERTIFIED: EN61558-1 AND EN61558-2-4: FILE # R72132191
3) 4000 VRMS HIPOT BETWEEN PRIMARY AND (SECONDARY + CORE).
   1500 VOLTS BETWEEN SECONDARY AND CORE.
4) WEIGHT: 91.62 LBS.
5) RoHS AND REACH COMPLIANT
6) ALL DIMENSIONS ARE IN INCHES.

MCI					NORTH BABYLON N.Y.
CUSTOMER	MCI				
TITLE	INDUSTRIAL CONTROL TRANSFORMER				
DRAWN BY	APPRVD BY	SCALE	DATE	DRAWING NUMBER	
JOW3	SMS	NONE	3-1-17	4-54-3016	