REVISIONS

LETTER	DESCRIPTION	DATE
A	UPDATED DRAWING AND LABEL	7-28-17

INPUT	JUMPERS	INPUT ON
480V	H4 TO H5	H1 & H8
460V	H4 TO H5	HI & H7
450V	H4 TO H5	H1 & H6
440V	H3 TO H5	H1 & H7
430V	H3 TO H5	H1 & H6
420V	H2 TO H5	H1 & H6
230/240V	H1 TO H5 & H4 TO H8 OUTPUT 4% LESS FOR 230 VOLTS	H1 & H8
220V	H1 TO H5 & H3 TO H7	H1 & H7
208/200V	H1 TO H5 & H2 TO H6 OUTPUT 4% LESS FOR 200 VOLTS	H1 & H6

OUTPUT	JUMPERS	OUTPUT ON
240V	X4 TO X5	X1 & X8
230V	X3 TO X5	X1 & X8
220V	X3 TO X5	X1 & X7
208V	X3 TO X5	X1 & X7
	TO GET 208 VOLTS, USE A 5% VOLTAGE UP CONNECTION FROM ACTUAL VOLTAGE EXAMPLE: INPUT 440V TO THE 460V TERMINAL	
120V	X1 TO X5 & X4 TO X8	X1 & X8
115V	X1 TO X5 & X4 TO X8	X1 & X8
	TO GET 115 VOLTS, USE A 5% VOLTAGE UP CONNECTION FROM ACTUAL VOLTAGE	
110V	X1 TO X5 & X3 TO X7	X1 & X7
100V	X1 TO X5 & X3 TO X7	X1 & X7
	TO GET 100 VOLTS, USE A 10% VOLTAGE UP CONNECTION FROM ACTUAL VOLTAGE	

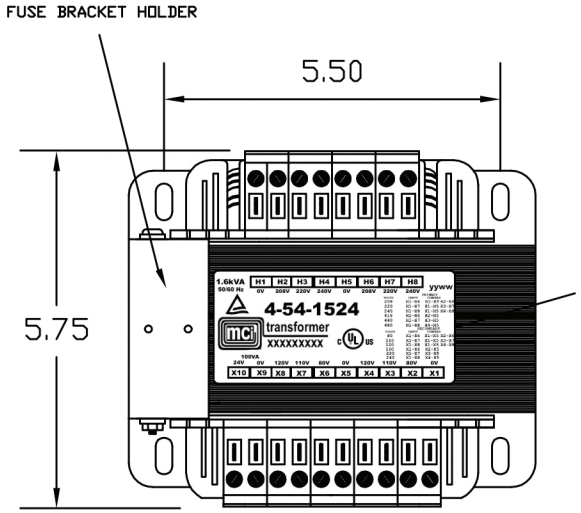

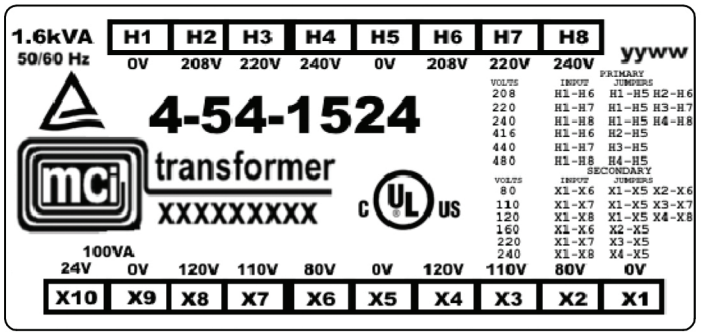

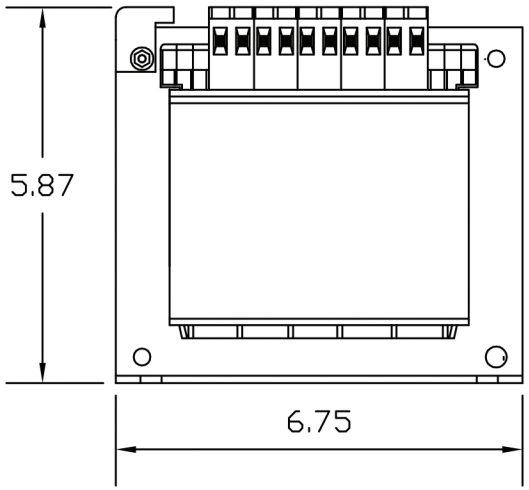

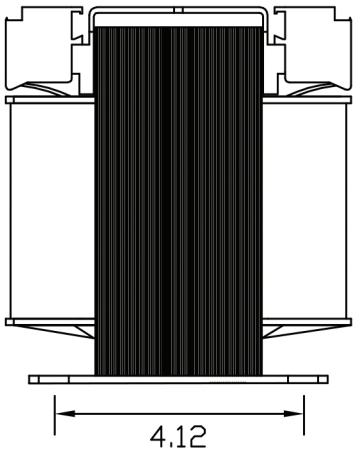

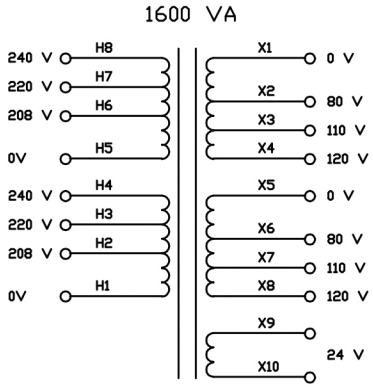

NOTES:

1) UL INSULATION SYSTEM E86543-CLASS F 155°C.
2) UL RECOGNIZED COMPONENT: ANSI/UL506, ANSI/UL5085-1, AND ANSI/UL 5085-2: FILE # E86403
3) CERTIFIED FOR CANADA TO STANDARD CSA-C22.2 NO 66.1-06 AND CSA-C22.2 NO 66.2-06: FILE # E86403
4) TUV CERTIFIED: EN61558-1 AND EN61558-2-4: FILE # R72132191
5) 4000 VRMS HIPOT BETWEEN PRIMARY AND (SECONDARY + CORE).
   1500 VOLTS BETWEEN SECONDARY AND CORE.
6) WEIGHT: 31.4 LBS.
7) RoHS AND REACH COMPLIANT
8) ALL DIMENSIONS ARE IN INCHES.

MCI — *NORTH BABYLON N.Y.*

CUSTOMER	MCI			
TITLE	INDUSTRIAL CONTROL TRANSFORMER			
DRAWN BY	APPRVD BY	SCALE	DATE	DRAWING NUMBER
JOW3	SMS	NONE	2-27-17	4-54-1524